AP51X Two-way Radio

User Manual

Hytera Communications Corporation Limited

Preface

Welcome to the world of Hytera and thank you for purchasing this product. This manual includes a description of the functions and step-by-step procedures for use.

To avoid bodily injury or property loss caused by incorrect operation, please carefully read the *Safety Information Booklet* before use.

This manual is applicable to the following product:

AP51X Two-way Radio (X may represent 2, 5, 6, or 8)

SyncComms

Contents

Documentation Information **4**
1. Packing List **6**
2. Product Overview **7**
2.1 Product Layout 7
2.2 Programmable Keys 7
3. Before Use **8**
3.1 Charging the Battery 8
3.2 Attaching the Belt Clip 8
3.3 Attaching the Battery 9
3.4 Attaching the Antenna 9
3.5 Attaching the Audio Accessory 10
3.6 Checking the Battery Power 11
4. Basic Operations **12**
4.1 Turning On or Off the Radio 12
4.2 Adjusting the Volume 12
4.3 Selecting a Zone 12
4.4 Selecting a Channel 12
4.5 Call on Analog Channel (Without Signaling) 12
5. LED Indicator **13**
6. Supplementary Features **14**
6.1 VOX 14
6.2 Power Level 14
6.3 Scan 14
6.4 Squelch Level 14
6.5 Scrambler 14
6.6 Monitor 15
6.7 Squelch Off 15
7. Troubleshooting **16**
8. Care and Cleaning **17**
8.1 Product Care 17
8.2 Product Cleaning 17
9. Optional Accessories **18**
10. Abbreviations **19**

SyncComms

Copyright Information

Hytera is the trademark or registered trademark of Hytera Communications Corporation Limited (the Company) in the People's Republic of China (PRC) and/or other countries or areas. The Company retains the ownership of its trademarks and product names. All other trademarks and/or product names that may be used in this manual are properties of their respective owners.

The product described in this manual may include the Company's computer programs stored in memory or other media. Laws in PRC and/or other countries or areas protect the exclusive rights of the Company with respect to its computer programs. The purchase of this product shall not be deemed to grant, either directly or by implication, any rights to the purchaser regarding the Company's computer programs. The Company's computer programs may not be copied, modified, distributed, decompiled, or reverse-engineered in any manner without the prior written consent of the Company.

Disclaimer

The Company endeavors to achieve the accuracy and completeness of this manual, but no warranty of accuracy or reliability is given. All the specifications and designs are subject to change without notice due to continuous technological development. No part of this manual may be copied, modified, translated, or distributed in any manner without the prior written consent of the Company.

We do not guarantee, for any particular purpose, the accuracy, validity, timeliness, legitimacy or completeness of the third-party products and contents involved in this manual.

If you have any suggestions or would like to receive more information, please visit our website at: https://www.hytera.com/en/download-center.html.

FCC Statement

This equipment has been tested and found to comply with the limits for a Class B digital device, pursuant to part 15 of FCC Rules. These limits are designed to provide reasonable protection against harmful interference in a residential installation. This equipment generates and can radiate radio frequency energy. If not installed and used in accordance with the instructions, it may cause harmful interference to radio communications. However, there is no guarantee that interference will not occur in a particular installation. Verification of harmful interference by this equipment to radio or television reception can be determined by turning it off and then on. The user is encouraged to try to correct the interference by one or more of the following measures:

- Reorient or relocate the receiving antenna. Increase the separation between the equipment and receiver.
- Connect the equipment into an outlet on a different circuit to that of the receiver's outlet.

SyncComms

- Consult your dealer or an experienced radio/TV technician for help.

Operation is subject to the following two conditions:

- This device may not cause harmful interference.
- This device must accept any interference received, including interference that may cause undesired operation.

Note: Changes or modifications to this unit not expressly approved by the party responsible for compliance could void the user's authority to operate the equipment.

Compliance with RF Exposure Standards

The radio complies with the following RF energy exposure standards and guidelines:

- United States Federal Communications Commission, Code of Federal Regulations; 47 CFR § 1.1307, 1.1310 and 2.1093
- American National Standards Institute (ANSI)/Institute of Electrical and Electronic Engineers (IEEE) C95. 1:2005; Canada RSS102 Issue 5 March 2015
- Institute of Electrical and Electronic Engineers (IEEE) C95.1:2005 Edition

RF Exposure Compliance and Control Guidelines and Operating Instructions

To control your exposure and ensure compliance with the occupational/controlled environmental exposure limits, always adhere to the following procedures.

Guidelines:

- Do not remove the RF Exposure Label from the device.
- User awareness instructions should accompany device when transferred to other users.
- Do not use this device if the operational requirements described herein are not met.

Operating Instructions:

- Transmit no more than the rated duty factor of 50% of the time. To transmit (talk), press the Push-to-Talk (PTT) key. To receive calls, release the PTT key. Transmitting 50% of the time, or less, is important because the radio generates measurable RF energy only when transmitting (in terms of measuring for standards compliance).

- Keep the radio unit at least 2.5 cm away from the face. Keeping the radio at the proper distance is important as RF exposure decreases with distance from the antenna. The antenna should be kept away from the face and eyes.
- When worn on the body, always place the radio in an approved holder, holster, case, or body harness or by use of the correct clip for this product. Use of non-approved accessories may result in exposure levels which exceed the FCC's occupational/controlled environmental RF exposure limits.
- Use of non-approved antennas, batteries, and accessories causes the radio to exceed the FCC RF exposure guidelines.
- Contact your local dealer for the product's optional accessories.

ISEDC Statement

The device has been tested and complies with SAR limits, users can obtain Canadian information on RF exposure and compliance.

Après examen de ce matériel aux conformité aux limites DAS et/ou aux limites d’intensité de champ RF, les utilisateurs peuvent sur l’exposition aux radiofréquences et la conformité and compliance d’acquérir les informations correspondantes.

This device complies with Innovation, Science and Economic Development Canada Compliance license-exempt RSS standard(s). Operation is subject to the following two conditions:

- This device may not cause harmful interference.
- This device must accept any interference received, including interference that may cause undesired operation.

Le présent appareil est conforme aux CNR d'Industrie Canada applicables aux appareils radio exempts de licence. L'exploitation est autorisée aux deux conditions suivantes: (1) l'appareil ne doit pas produire de brouillage, et (2) l'utilisateur de l'appareil doit accepter tout brouillage radioélectrique subi, même si le brouillage est susceptible d'en compromettre le fonctionnement.

EU Regulatory Conformance

As certified by the qualified laboratory, the product is in compliance with the essential requirements and other relevant provisions of 2014/53/EU.

Please note that the above information is applicable to EU countries only.

Documentation Information

Instruction Conventions

Icon	Description
NOTE	Indicates references that can further describe the related topics.
CAUTION	Indicates situations that could cause data loss or equipment damage.

Notation Conventions

Item	Description	Example
Boldface	Denotes menus, tabs, parameter names, window names, dialogue names, and hardware buttons.	To save the configuration, click **Apply**.
		The **Log Level Settings** dialogue box appears.
		Press the **PTT** key.
" "	Denotes messages, directories, file names, folder names, and parameter values.	The screen displays "Invalid Battery!".
		Open "PSS.exe".
		Go to "D:/opt/local".
		In the Port text box, enter "22".
>	Directs you to access a multi-level menu.	Go to **File** > **New**.
Italic	Denotes document titles.	For details about using the DWS, refer to *Dispatch Workstation User Guide*.
`Courier New`	Denotes commands and their execution results.	To set the IP address, run the following command: `vos-cmd - m name IP`

Key Operations

Operation	Description
Short press	Press and release quickly.
Long press	Press and hold for preset time.

SyncComms

Press and hold	Keep the key pressed.

SyncComms

1. Packing List

Please unpack carefully and check that you have received the following items. If any item is missing or damaged, contact your dealer.

Item	Quantity (PCS)	Item	Quantity (PCS)
Radio	1	USB Type-C Cable	1
Battery	1	Strap	1
Belt Clip	1	Documentation Kit	1
Power Adapter	1	/	/

NOTE

Figures in this manual are only for reference.

SyncComms

2. Product Overview

2.1 Product Layout

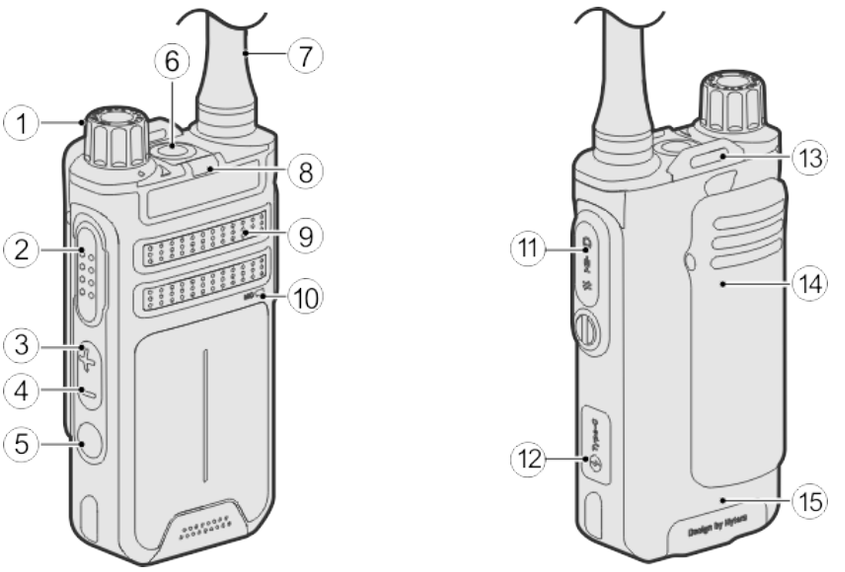

No.	Part Name	No.	Part Name	No.	Part Name
1	Channel Selector Knob	6	On-Off Key	11	Accessory Connector
2	Push-to-Talk (PTT) Key	7	Antenna	12	USB Type-C Port
3	Volume Up Key	8	LED Indicator	13	Strap Hole
4	Volume Down Key	9	Speaker	14	Belt Clip
5	Side Key 3 (SK3)	10	Microphone	15	Battery

2.2 Programmable Keys

For enhanced convenience, you can request your dealer to program the **SK3** as shortcuts to radio features. For details, consult your dealer.

SyncComms

3. Before Use

3.1 Charging the Battery

CAUTION

- Use the approved charger to charge the battery.
- Read the *Safety Information Booklet* before charging.
- The remaining lithium-ion battery power is limited to 30% pursuant to the new lithium battery shipment regulation approved by the International Air Transport Association (IATA).

Use the USB Type-C cable to connect the radio with battery attached to the power adapter, power bank, or PC.

The LED indicator on the radio shows the charging status, as described in the following table.

LED Indicator	Charging Status
Glows red	The battery is being charged.
Flashes red rapidly	The battery fails to be charged.
Glows green	The battery is fully charged.

3.2 Attaching the Belt Clip

Align the holder on the belt clip with the groove on the battery, and then press the belt clip downwards into place.

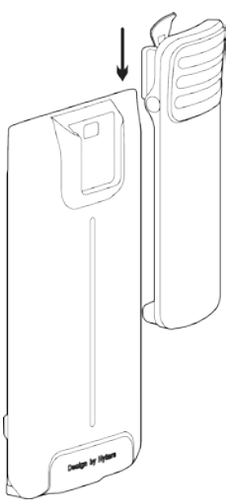

NOTE

You can press and hold the belt clip spring plate and push the belt clip upwards to remove it.

SyncComms

3.3 Attaching the Battery

CAUTION

- Use the approved battery to avoid the risk of explosion.
- Dispose of the used battery according to "Precautions for Disposal" in the *Safety Information Booklet*.

1. Align the tabs on the battery with the grooves in the battery slot.
2. Press and push the battery into the battery slot until a click is heard.

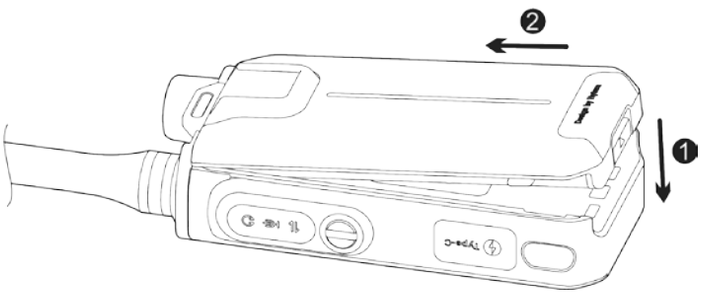

NOTE

To remove the battery, make sure that the radio is turned off, and then lift the battery latch.

3.4 Attaching the Antenna

CAUTION

Do not hold the radio by the antenna and swing it. This may affect the antenna performance and shorten the life span of the antenna.

SyncComms

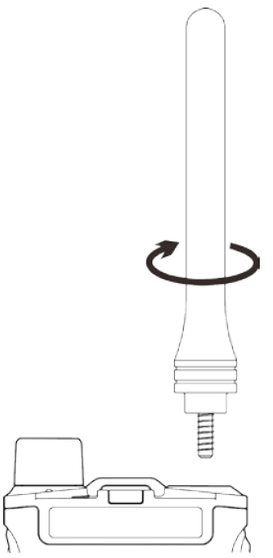

3.5 Attaching the Audio Accessory

⚠ CAUTION

For optimal waterproof and dustproof performance, do as follows:

- Attach the accessory with care to avoid scraping the silicone rubber surrounding the accessory connector screw hole.
- Close the accessory connector cover and fasten the screw after removing the accessory.

1. Loosen the screw on the accessory connector cover, and then remove the cover.

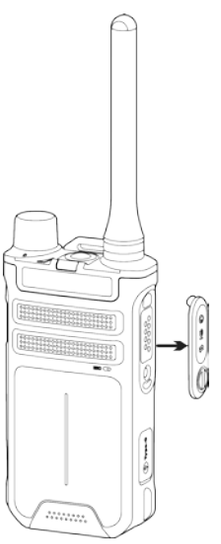

2. Insert the audio accessory plug into the accessory connector.

SyncComms

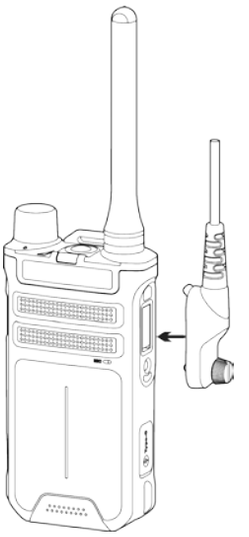

3. Tighten the screw on the audio accessory plug.



3.6 Checking the Battery Power

Press the preprogrammed **Check Battery Power** key to check the remaining battery power through the LED indicator and Text To Speech (TTS).

LED Indicator	TTS	Radio Status
Glows green for 2s	Battery power level 3	The battery power is high.
Glows orange for 2s	Battery power level 2	The battery power is medium.
Glows red for 2s	Battery power level 1	The battery power is low.

SyncComms

4. Basic Operations

4.1 Turning On or Off the Radio

To turn on or off the radio, press and hold the **On-Off** key.

4.2 Adjusting the Volume

Press the **Volume Up** key to increase the volume, or **Volume Down** key to decrease the volume.

4.3 Selecting a Zone

A zone is a group of channels within the same operational area. The radio supports 2 zones, each of which consists of up to 16 channels.

To select a zone, press the preprogrammed **Zone Up** or **Zone Down** key.

4.4 Selecting a Channel

The radio receives and transmits voice and data on the selected channel. Before selecting a channel, make sure that the current zone contains the channel.

Rotate the **Channel Selector** knob to select a channel.

4.5 Call on Analog Channel (Without Signaling)

When you are speaking during a call, keep the microphone about 2.5 cm to 5 cm away from your mouth. This ensures optimal voice quality on the receiving radio.

On an analog channel without signaling, you can initiate a call to all the other users on the channel.

Rotate the **Channel Selector** knob to select the analog channel, and then press and hold the **PTT** key.

5. LED Indicator

LED Indicator	Radio Status
Flashes green	The radio is being turned on.
Glows red	The radio is transmitting.
Glows green	The radio is receiving.
Flashes red slowly once every 1 minute	The battery power is low.
Flashes red rapidly once every 0.2s	The radio is programming.
Flashes orange slowly	The radio is scanning.
Glows orange	The call is on hold.

6. Supplementary Features

6.1 VOX

When the voice detected by the microphone reaches the value to trigger the transmission, the radio automatically transmits the voice without the **PTT** key pressed. The VOX Gain feature preprogrammed by your dealer is used to control the sensitivity of microphone transmission.

Press the preprogrammed **VOX** key to enable this feature.

6.2 Power Level

The Power Level feature allows you to set the TX power level to high or low. High power enables communication with radios far away from you but consumes more battery power. Low power enables communication with radios close to you and saves battery power.

Press the preprogrammed **Adjust Power Level** key to adjust the power level.

6.3 Scan

The Scan feature allows you to listen to activities on other channels, keeping track of your team members.

Press the preprogrammed **Scan** key to enable this feature.

With this feature enabled, the radio scans according to the scan list preset for the current channel. The LED indicator flashes orange slowly. When detecting activities on a channel, the radio stays on the channel and the LED indicator glows green.

6.4 Squelch Level

The squelch level refers to the squelch threshold required for the speaker of the radio to be turned on. The higher squelch level requires stronger signal.

Press the preprogrammed **Adjust Squelch Level** key to adjust the squelch level.

6.5 Scrambler

The Scrambler feature allows the radio to invert the frequency spectrum of transmitted audio signals. Only the receiving radio with the same Scrambler settings can restore the audio signals. This prevents eavesdropping and ensures communication privacy.

Press the preprogrammed **Scrambler** key to enable this feature.

6.6 Monitor

The Monitor feature allows the radio to receive more signals including weak signals, and helps you to recognize weak voices in the speaker.

Press the preprogrammed **Monitor** key to switch between monitor squelch mode and receive squelch mode.

6.7 Squelch Off

With the Squelch Off feature enabled, the speaker will keep unmuted regardless of whether carrier exists. Then the radio sounds background noise.

Press the preprogrammed **Squelch Off** key to enable this feature.

SyncComms

7. Troubleshooting

Phenomena	Analysis	Solution
The radio cannot be turned on.	The battery may be installed improperly.	Remove and reattach the battery.
	The battery power may have run out.	Recharge or replace the battery.
	The battery may suffer from poor contact caused by dirtied or damaged battery contacts.	Clean the battery contacts.
The keys do not work.	The keys may fail to function temporarily.	Restart the radio.
	The keys may be damaged.	Contact your dealer or Hytera technicians for maintenance.
The LED indicator is abnormal.	The indication may be abnormal.	Restart the radio.
	The LED indicator may be damaged.	Contact your dealer or Hytera technicians for maintenance.
During receiving, the voice is weak, discontinuous, or totally inactive.	The signal may be weak.	Make sure that the radio is within the signal coverage.
	The volume may be low.	Increase the volume.
	The speaker may be blocked or damaged.	Clean the surface of the speaker.
The battery fails to be charged.	The power adapter plug may be inserted into the socket improperly.	Reconnect the radio to the power adapter.
	The USB Type-C cable may be poorly connected.	Reconnect the USB Type-C cable.

If the above solutions cannot fix your problems, or you may have some other queries, please contact us or your local dealer for more technical support.

SyncComms

8. Care and Cleaning

To guarantee optimum performance as well as a long service life of the product, follow the tips below.

8.1 Product Care

- Do not pierce or scrape the product.
- Keep the product far away from substances that can corrode the circuitry.
- Do not hold the product by the earpiece cable.
- Close the accessory connector cover when no accessory is in use.

8.2 Product Cleaning

⚠ CAUTION

Turn off the product and remove the battery before cleaning.

- Clean up the dust and fine particles on the product surface and charging contacts with a clean and dry lint-free cloth or a brush regularly.
- Use neutral cleanser and a non-woven fabric to clean the keys, knobs, and front case after long-time use. Do not use chemical preparations such as stain removers, alcohol, sprays, or oil preparations, so as to avoid surface case damage.
- Make sure that the product is completely dry before use.

SyncComms

9. Optional Accessories

CAUTION

Use the accessories approved by Hytera only. Otherwise, we will not be liable for any loss or damage arising out of the use of unauthorized accessories.

Contact your local dealer for the optional accessories used with the product.

SyncComms

10. Abbreviations

Abbreviation	Full Name
LED	Light-Emitting Diode
PTT	Push-to-Talk
SK	Side Key

Hytera is the trademark or registered trademark of Hytera Communications Corporation Limited.

© 2021 Hytera Communications Corporation Limited. All Rights Reserved.

Address: Hytera Tower, Hi-Tech Industrial Park North, 9108# Beihuan Road, Nanshan District, Shenzhen, People's Republic of China

Postcode: 518057

https://www.hytera.com

SyncComms